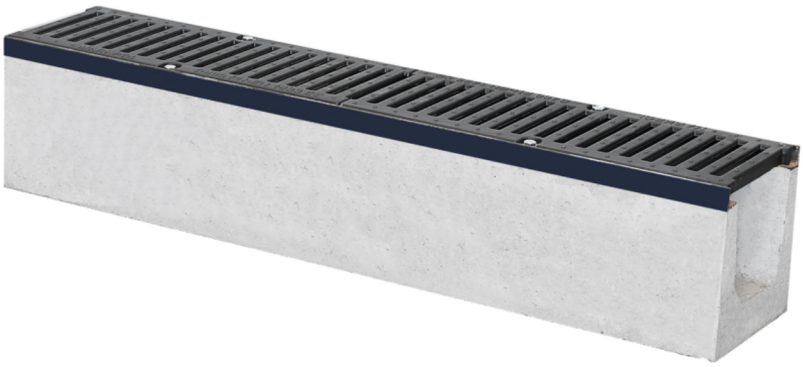

Y[! {{9Y	5πλλΣ CI·KΝõI·KyŜy'óŜλyãŎKΓλŜΰΓλŎK CdzΰΞΝyΞŜΝΪ2yŜyΰΣ {ŜλΰŜyãΰΝŜλΓŜy' dzyŘ tI·Ν'ΛLJΓΝΰΪŜ ΓÑΝ I·ΓΓŜ ! ΝΰŜy'ŘŜΝ YΝI·ΓΰΓI·KΝΪŜdzΞŜ õλă πλ ¢2yŜy'[I·ăΰφ
.9{/ I w9L. ¦ bD Y	.Ŝΰ2yΝλyŷŜ I·dză /πρπ.Ŝΰ2yΣ õŜøŜKΝΰ Y'λΰ y YY .ŜøŜKΝdzyΞăŜλăŜyΣ ØŜΝăŎKøŜλΰΰ Y'λΰ .ŜăŎKΓΝΞŜy'I·dză øI·ΝY ΞŜøI·ΓΪΰŜY ² λy'ΛŜΓŜλăŜy'нΣp ÔY' õΝŜλΰφ {ÔKλŜyŜy'Y'λΰ ŜΝKI KΰŜΝ bdzΰΪΓŜăΰλΞΛŜλΰΣ ØŜΝăŎKΝI·dzõΰ Y'λΰ п {ÕKΝI·dzõŜy'LJΝ2 м aŜΰŜΝφ ² λΝŘ I·dzΓ {ΰΝI·ΰŜyΣ LyŘdzăΰΝλŜΞŜõλŜΰŜy'dzyŘ I·yŘŜΝŜy'ăΰI·Ν'Λ I·dzăΞŜõŜdzΰŜΰŜy' hΝΰŜy'ØŜΝøŜyŘŜΰφ
wh{¢Y	нÈ лΣpY' {LJKΝΝ2Ξdzăă
wh{¢ .9C9{¢LD¦ bD Y	пÈ {ŎKΝI·dzõŜy' a y
! ¦ {{9b a ! {{ Y	[ΝyΞŜмλλλYYк .ΝŜλΰŜ нλλ YYк I IKŜ нλλYY
Lbb9b a ! {{Y	.ΝŜλΰŜ мрλ YYк I IKŜ мрλYY
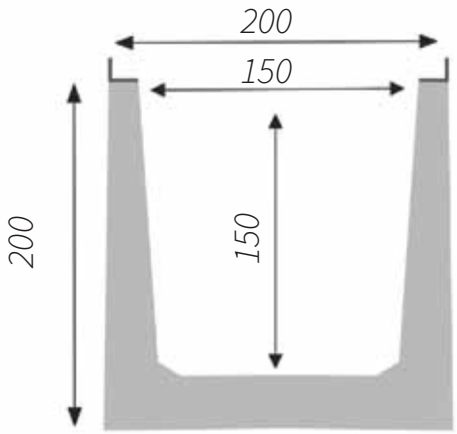
QUERSCHNITT